tapflo®

CTV VERTICAL CENTRIFUGAL PUMPS

2020 | 1

All about your flow™

www.tapflo.com

All about your flow™

We began our journey 40 years ago in Kungälv, a small town on the Swedish west coast, as a family company with an ambition to one day become a global player on the pump market.

Since 1980, we have taken pride in delivering a wealth of knowledge and passion for pumps to the industry, whilst supplying a wide range of premium products for various industrial applications.

Over the years, the company has developed into a global Tapflo Group with branches and distributors present in nearly every region of the world.

One thing did not change - we are still a family company.

Our solutions are designed and manufactured in Europe and distributed globally to offer the best service and flow solutions to our customers for a variety of applications.

Our values, Commitment, Quality and Simplicity are reflected both in our product and business approach.

For fast and flexible service and high-quality products readily available worldwide, choose Tapflo.

Quality commitment

At Tapflo we are simply committed to quality. As a result, our production standards, as well as products quality, comply with various globally recognised certification and quality control standards. The Tapflo manufacturing process is certified according to ISO 9001:2015, confirming that our processes are appropriate, effective, customer-focused and continuously improved.

Tapflo values

Our culture is concluded in Our values

Commitment

We are different from our competitors because of our willingness to exceed the customers' expectations, move fast and be flexible. Our culture is based on the spirit of togetherness, enthusiasm and integrity. We come from all over the world but we share the same values and we respect each other. We are committed.

Quality

We understand that the quality in our work is never better than the weakest link, that's why we focus on every small detail. We share a common passion for continuously finding more efficient and effective ways to provide value to our customers. As a manufacturer we have control of the complete process both in terms of our products and the way we operate internally. That is why we manufacture the highest quality pumps in our segment.

Simplicity

We have a saying, "Simple is art" which means we try to find smooth and uncomplicated solutions in everything. By keeping it simple we can focus on the essential, like designing uncomplicated pumps with few components. For us it is a key to success; strive to simplify what is complex.

CTV Vertical Pumps

The superior solution for a reliable fluid circulation & transfer.

CTV is a single stage vertical centrifugal pump that is simple but very reliable in duty. The pump is specialized for transfer and circulation of various liquids from containers, sumps and tanks. CTV is manufactured from PP (polypropylene), PVDF or stainless steel AISI 316L.

Features & Benefits

Leakage free and dry running safe

CTV is installed vertically with the motor above the liquid surface. In this way the pump does not need any mechanical seal that usually is a source for leakage problems. Furthermore the pump is designed to be dry running safe.

Maintenance free

The simple design without bearings or mechanical seals grants for a pump that is usually maintenance free. CTV is also insensitive of solids, particles up to Ø 6 mm are allowed.

Replacing self priming pumps

In many installations the CTV pump replaces a self-priming pump. The CTV pump head is submersed in the liquid. The pump operates more reliably compared to a self-priming pump. The submersion depth is up to 425mm (depending on model), but may also be equipped with a suction extension.

CTV pumps are successfully used in various applications in today's industries. Below are some examples.

Surface treatment

Transfer and return pumping in galvanizing, hot zinc, pickling and oxidation processes

Water treatment

Transfer and return pumping

Heat exchangers

Return pumping in heat exchangers

Waste disposal

Emptying sumps

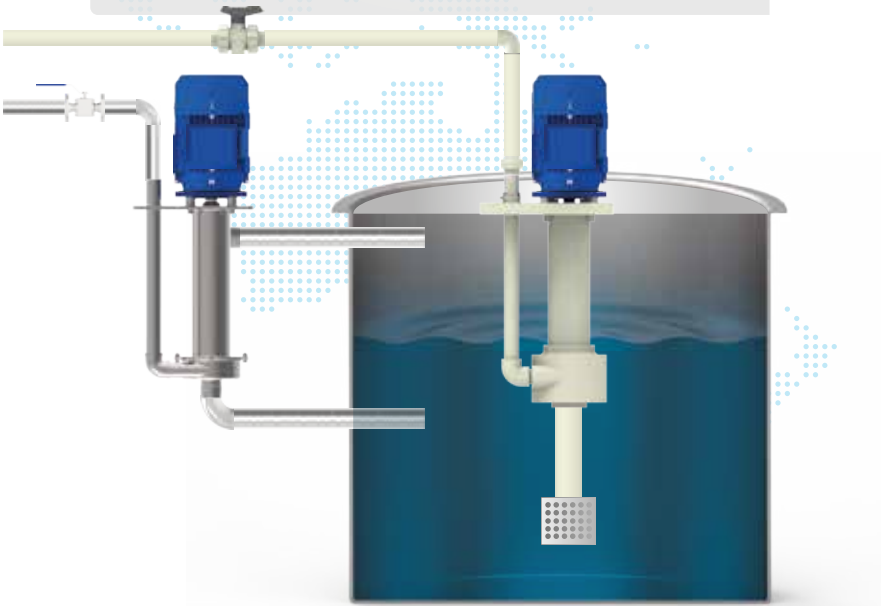

CTV is commonly installed in surface treatment baths, circulating through filter and further to nozzle ramps.

CTV Pumps in PP & PVDF

PP
PP (polypropylene) is suitable for variety of chemicals at temperatures up to 70°C.
Ideal for pickling baths and acidic degreasing solutions.

PVDF
PVDF (polyvinylidene fluoride) has superior chemical and mechanical features.
Ideal with hot acids up to 100°C, for example hot hydrofluoric acid.

CTV 25-9:	**10.2 m³/h**
CTV 25-10:	**13.2 m³/h**
CTV 25-11:	**15.6 m³/h**
CTV 25-11.5:	**18.0 m³/h**
CTV 32-8.5:	**19.8 m³/h**
CTV 32-10:	**24.0 m³/h**
CTV 32-12.5:	**27.0 m³/h**

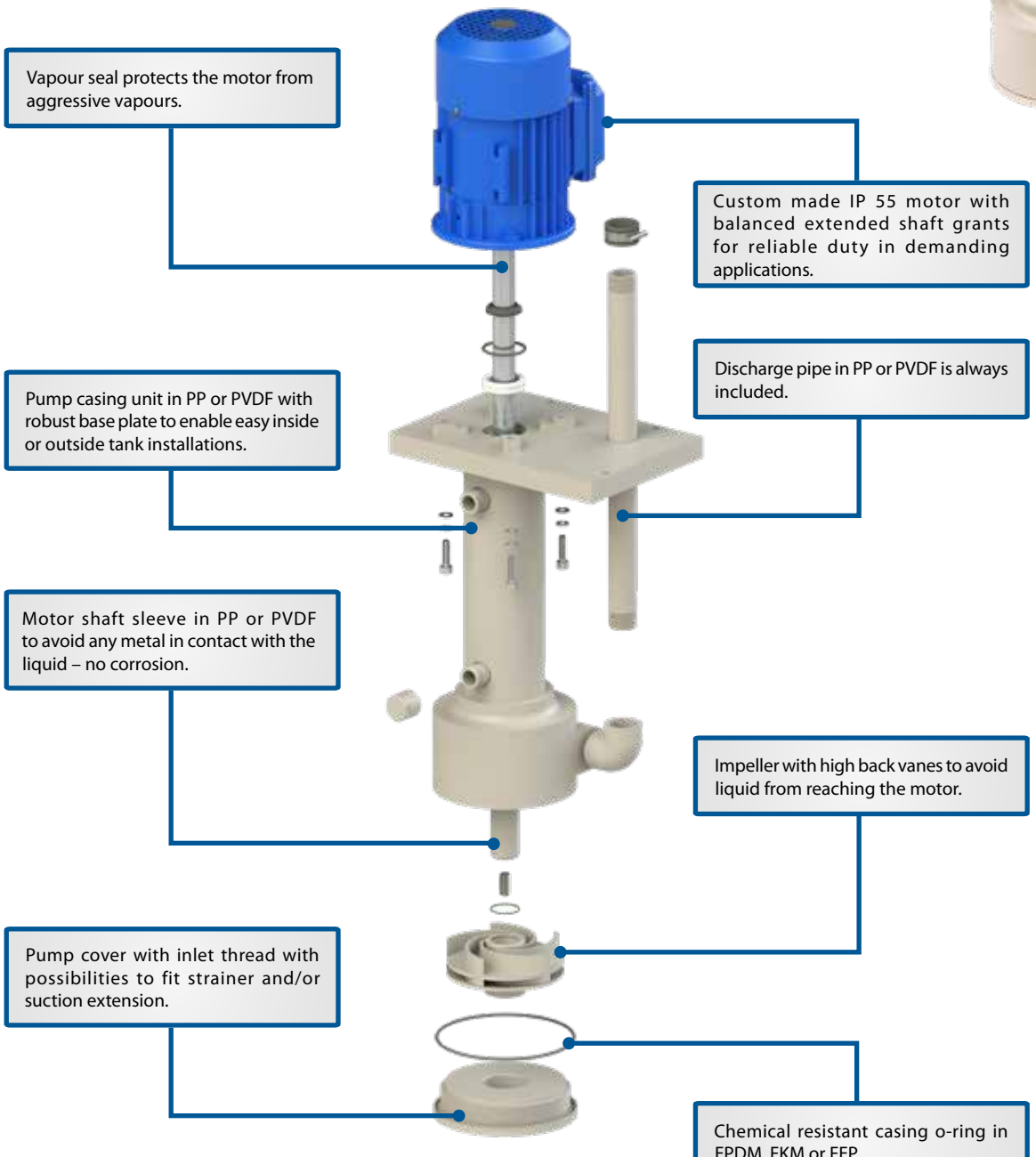

Performance curves

The performance curves are based on water. (T=20 °C, p=1000 kg/m, n=2900 rpm)

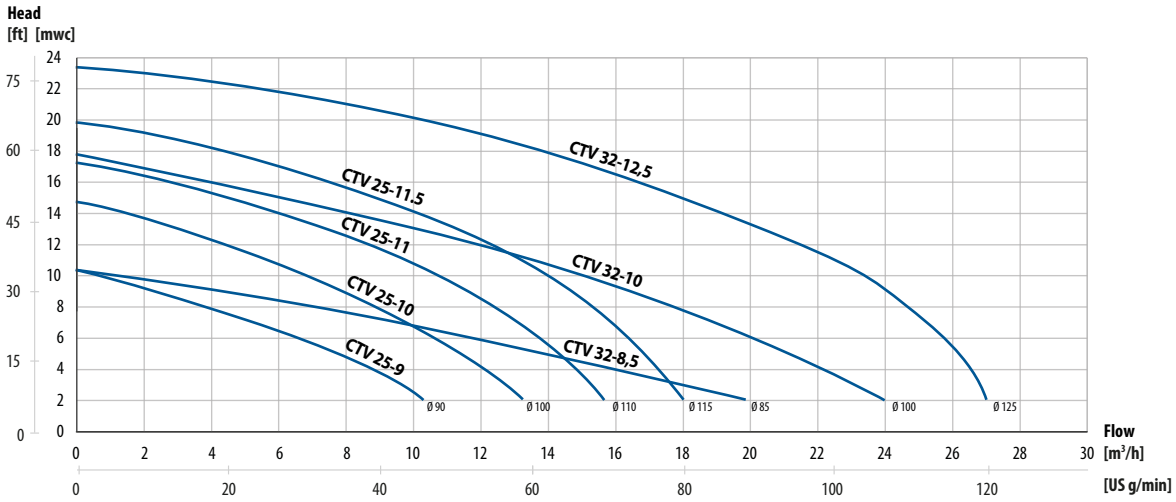

Dimensions and technical data

Dimensions in mm, where other is not indicate

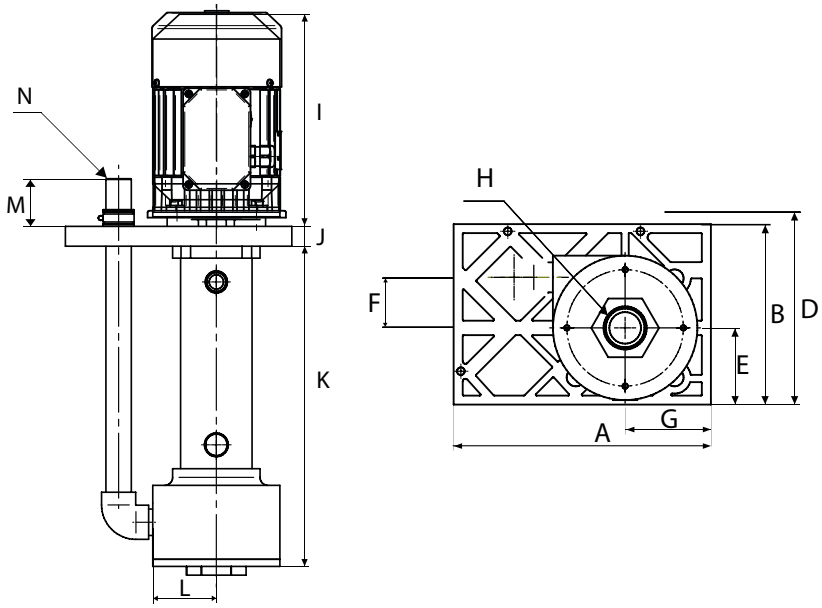

Dimension	CTV 25	CTV 32
A	285	
B	200	
E	85	
F	56	
G	95	
H	1½″	
J	25	
K	419	
L	123	126
M	60	
N	1″	1¼″

Motor power	D	I
0.55 kW	196	213
0.75-2.2 kW	214	267

General characteristics	25-9	25-10	25-11	25-11.5	32-8.5	32-10	32-12.5
Max capacity (m³/h)	10.2	13.2	15.6	18.0	19.8	24.0	27.0
Max head (m)	10	14	16	19	10	17	23
Motor power (kW)	0.55	0.75	1.1	1.5	1.1	1.5	2.2
Outlet dimension (male BSP)	1″	1″	1″	1″	1¼″	1¼″	1¼″
Motor data	3-phase, 2-pole (~2900 rpm), 380-420 VAC, 50 Hz, IP 55						
Max temperature	Pump in PP: 70°C, pump in PVDF: 100°C						

Materials	
Pump casing and impeller	PP or PVDF
Casing o-ring	EPDM, FKM or FEP

CTV Pumps stainless steel

Stainless steel pumps

The stainless steel version is ideal at higher temperatures, up to 100°C and for special applications like transfer hot sodium hydroxide.

All wetted metal components are made of corrosion resistant stainless steel AISI 316L.

CTV 20-9:	12 m³/h
CTV 25-9.8:	17 m³/h
CTV 40-12.5:	19 m³/h
CTV 40-12.5:	34 m³/h
CTV 40-13.5:	20 m³/h

Vapour seal protects the motor from aggressive vapours.

Custom made IP 55 motor with balanced extended shaft grants for reliable duty in demanding applications.

Discharge pipe in stainless steel is always included.

Motor shaft sleeve in stainless steel to avoid any metal in contact with the liquid – no corrosion.

Shaft bushing in PTFE to grant a reliable operation.

Chemical resistant casing o-ring in EPDM, FKM or FEP.

Open impeller that is insensitive of particles and solids.

Pump cover with inlet thread with possibilities to fit strainer and/or suction extension.

Performance curves

The performance curves are based on water. (T=20 °C, p=1000 kg/m, n=2900 rpm)

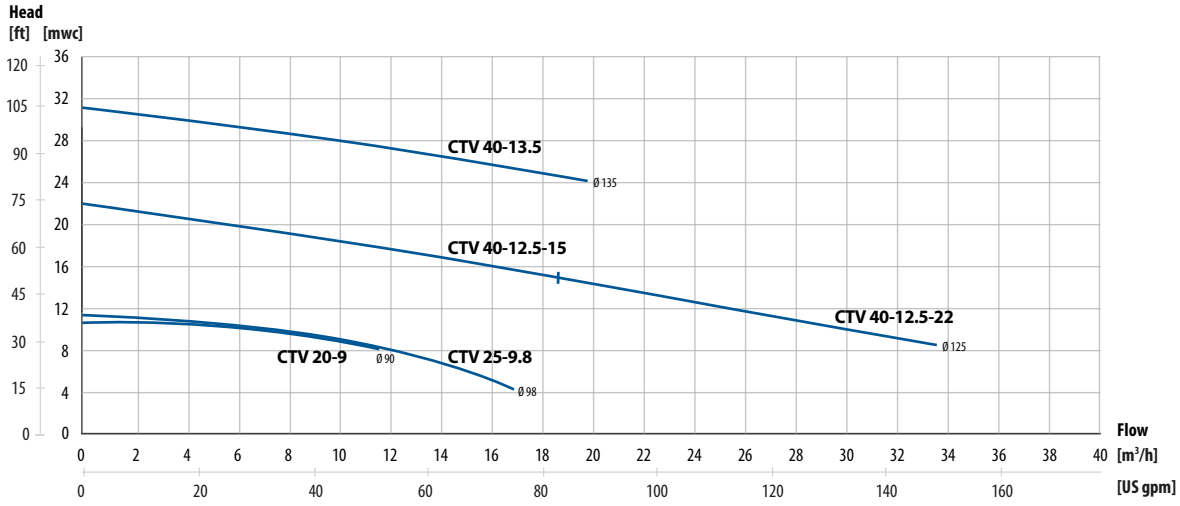

Dimensions and technical data

Dimensions in mm, where other is not indicated

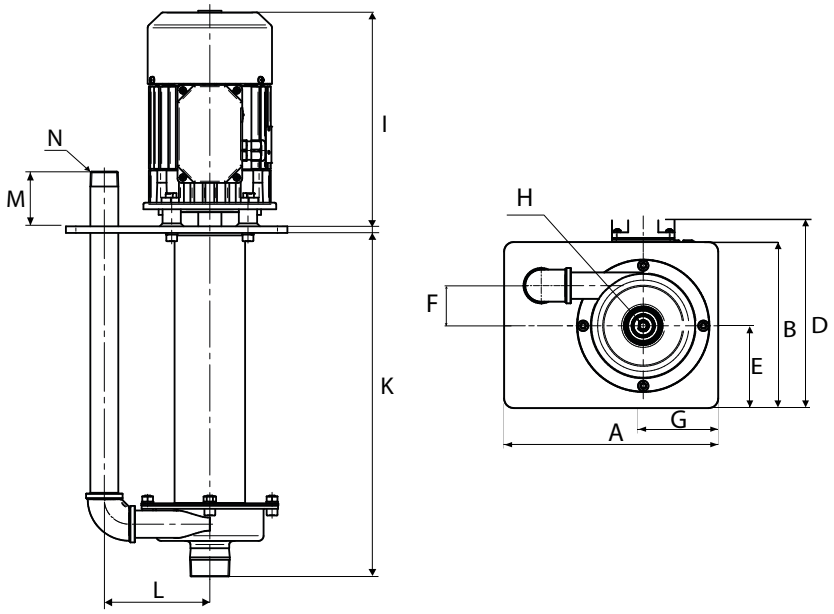

Dimension	CTV 20	CTV 25	CTV 40
A	267		
B	207		
E	102.6		
F	36	50	66
G	93.5		
H	1″	1½″	1½″
J	8		
K	420.5	420.5	425
L	113.5	127	139
M	60		
N	¾″	1″	1½″

Motor power	D	I
0.55 kW	214	211
0.75-2.2 kW	253	265

General characteristics	20-9	25-9.8	25-9.8	40-12.5	40-12.5	40-13.5
Max capacity (m³/h)	12	17	17	19	34	20
Max head (m)	10	11	11	22	22	31
Motor power (kW)	0.55	0.75	1.1	1.5	2.2	2.2
Outlet dimension (male BSP)	¾″	1″	1″	1½″	1½″	1½″
Motor data	3-phase, 2-pole (~2900 rpm), 380-420 VAC, 50 Hz, IP 55					
Max temperature	100°C					

Materials	
Pumpcasing and impeller	Stainless steel AISI 316L
Casing o-ring	EPDM, FKM or FEP

TAPFLO AB

Sweden

Filaregatan 4 | S-442 34 Kungälv

Tel: **+46 303 63390**
Fax: **+46 303 19916**

E-mail addresses:
Commercial questions: **sales@tapflo.com**
Orders: **order@tapflo.com**
Tech support: **support@tapflo.com**

Tapflo products and services are available in 75 countries on 6 continents.

Tapflo is represented worldwide by own Tapflo Group Companies and carefully selected distributors assuring highest Tapflo service quality for our customers' convenience.

AUSTRALIA | AUSTRIA | AZERBAIJAN | BAHRAIN | BELARUS | BELGIUM | BOSNIA | BRAZIL | BULGARIA | CANADA | CHILE | CHINA | COLOMBIA | CROATIA | CZECH REPUBLIC | DENMARK | ECUADOR | EGYPT | ESTONIA | FINLAND | FRANCE | GREECE | GEORGIA | GERMANY | HONG-KONG | HUNGARY | ICELAND | INDIA | INDONESIA | IRELAND | ISRAEL | ITALY | JAPAN | JORDAN | KAZAKHSTAN | KUWAIT | LATVIA | LIBYA | LITHUANIA | MACEDONIA | MALAYSIA | MEXICO | MONTENEGRO | MOROCCO | NETHERLANDS | NEW ZEALAND | NORWAY | POLAND | PORTUGAL | PHILIPPINES | QATAR | ROMANIA | RUSSIA | SAUDI ARABIA | SERBIA | SINGAPORE | SLOVAKIA | SLOVENIA | SOUTH AFRICA | SOUTH KOREA | SPAIN | SWEDEN | SWITZERLAND | TAIWAN | THAILAND | TURKEY | UKRAINE | UNITED ARAB EMIRATES | UNITED KINGDOM | USA | UZBEKISTAN | VIETNAM

Tapflo Group Companies

Australia
Tapflo Oceania (Pty)
Tel: +61 1800 303 633
sales@tapflo.com.au

Austria
Tapflo Austria
Tel: +43 732 27292910
sales@tapflo.at

Baltic States
Tapflo Latvia
Tel: +371 67472205
sales@tapflo.lv

Belarus
Tapflo Belarus
Tel: +375 17 3934609
sales@tapflo.by

Belgium
Tapflo Benelux B.V.
Tel: +31 (0)85 00 743 00
info@tapflo.nl

Bulgaria
Tapflo EOOD
Tel: +359 (0)2 974 18 54
office@tapflo.bg

Canada
Tapflo Canada
Tel: +1 514 813 5754
canada@tapflo.com

Croatia
Tapflo GmbH
Tel: +385 91 4884 666
sales@tapflo.hr

Czech Republic
Tapflo s.r.o.
Tel: +420 513 033 924
tapflo@tapflo.cz

China
Tapflo (Wuxi)
Tel: +86 510 8241 7072
sales@tapflo.cn

Denmark
Tapflo Danmark
Tel: +45 36 454600
info@tapflo.dk

France
Tapflo France
Tel: +33 1 34 78 82 40
info@tapflo.fr

India
Tapflo Fluid Handling India Pvt Ltd
Tel: +91 20 65000215
ac@tapflo.in

Ireland
Tapflo Ireland Ltd
Tel: +353 1 2011911
info@tapflo.ie

Italy
Tapflo Italia
Tel: +39 0362307698
info@tapfloitalia.com

Japan
Tapflo Japan K.K.
Tel: +81-3-6240-3510
tapflojp@tapflo.co.jp

Kazakhstan
Tapflo Kazakstan
Tel: +7 727 3278347
sales@tapflo.kz

Netherlands
Tapflo Benelux B.V.
Tel: +31 (0)85 00 743 00
info@tapflo.nl

Poland
Tapflo Sp. z o.o.
Tel: +48 58 530 42 12
info@tapflo.pl

Romania
S.C. Tapflo Rom. S.r.l.
Tel: +40 21 3451255
sales@tapflo.ro

Russia
Tapflo Company
Tel: +7 495 232 18 28
sales@tapflo.com.ru

Serbia
Tapflo d.o.o.
Tel: +381 21 44 58 08
sales@tapflo.rs

Slovakia
Tapflo s.r.o.
Tel: +421 911 137 883
tapflo@tapflo.sk

Slovenia
Tapflo GmbH
Tel: +386 68 613 474
sales@tapflo.hr

Spain
Tapflo Iberica
Tel: +34 91 8093182
avives@tapfloiberica.es

South Africa
Tapflo (Pty) Ltd
Tel: +27 31 701 5255
sales@tapflo.co.za

Turkey
Tapflo Makina Ltd
Tel: +90 216 467 33 11
sales@tapflo.com.tr

Ukraine
TOB Tapflo
Tel: +380 44 222 68 44
sales@tapflo.ua

Uzbekistan
Tapflo Uzbekistan
Tel: +998 712370940
sales@tapflo.uz

United Kingdom
Tapflo (UK) Ltd
Tel: +44 2380 252325
sales@tapflopumps.co.uk

www.tapflo.com

Tapflo® is a registered trademark of Tapflo AB. All rights reserved.
Information in this document is subject to change without notice. Reproduction in any manner without written permission of Tapflo Group is forbidden.
Tapflo Group reserves the right to make changes in product design, or detail, and to discontinue any product or material without notice.

Art. No. 10-2207